DocuSign Envelope ID: 78323C21-DA7C-41F0-BC84-7B94DDE8CEB1

6/2/99

DOCUMENT NOT CONSIDERED FINAL UNLESS ALL SIGNATURES COMPLETED

PROJECT REFERENCE NO.	SHEET NO.
14SP.20221.3	2A-1

ROADWAY DESIGN ENGINEER — NORTH CAROLINA PROFESSIONAL SEAL 26960 ENGINEER — DocuSigned by: Kevin McGrath — 8/4/2017

PAVEMENT DESIGN ENGINEER — NORTH CAROLINA PROFESSIONAL SEAL 26960 ENGINEER — DocuSigned by: Kevin Winters — 8/4/2017

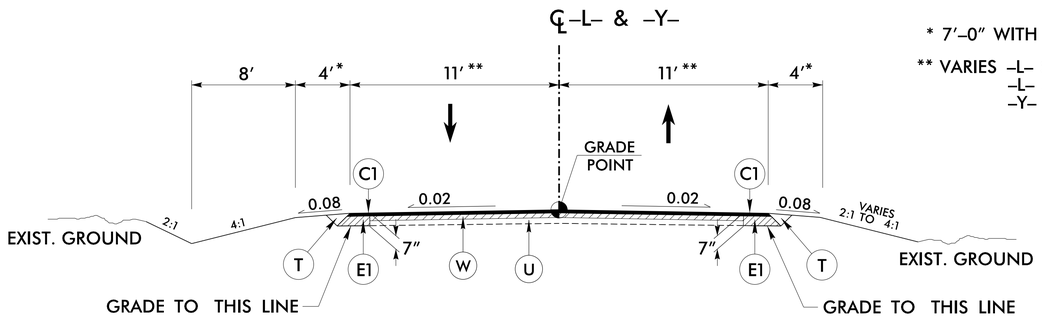

* 7′–0″ WITH GUARDRAIL

** VARIES –L– STA. 11+00 TO 11+50
–L– STA. 16+25 TO 16+75
–Y– VARIES

TYPICAL SECTION NO. 1

USE TYPICAL SECTION NO. 1

–L– STA. 11+00 TO –L– STA. 12+00
–L– STA. 16+25 TO –L– STA. 16+75
–Y– STA. 10+45 TO –L– STA. 10+70

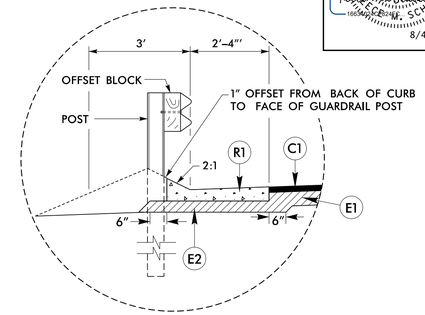

INSET A

SBG –L– STA. 12+43 LT TO BEGIN APPROACH SLAB

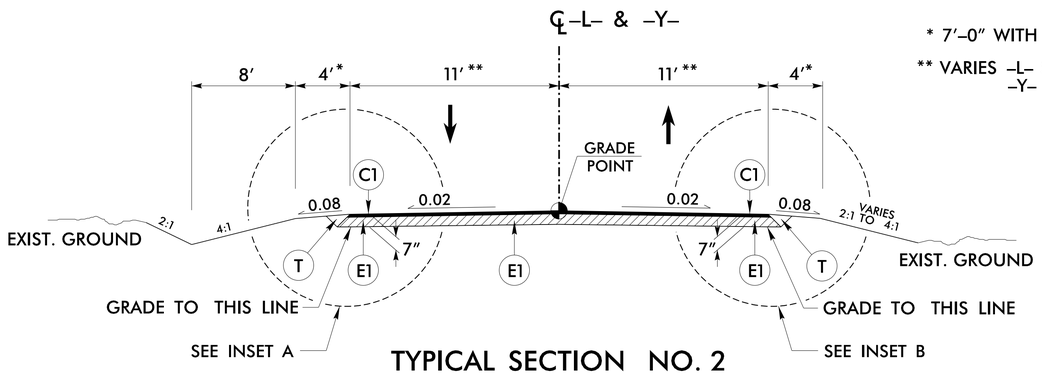

* 7′–0″ WITH GUARDRAIL

** VARIES –L– STA. 16+25 TO 16+40
–Y– VARIES

TYPICAL SECTION NO. 2

USE TYPICAL SECTION NO. 2

–L– STA. 12+00 TO –L– STA. 12+62.81 (BEGIN BRIDGE)
–L– STA. 14+15.19 (END BRIDGE) TO –L– STA. 16+25
–Y– STA. 10+11 TO –L– STA. 10+45

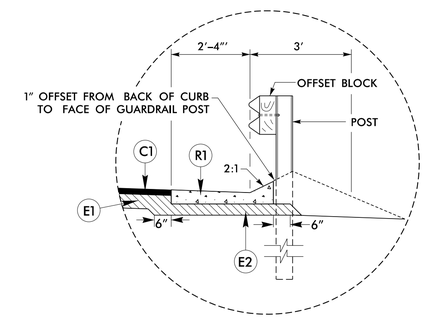

INSET B

SBG –L– STA. 12+43 RT TO BEGIN APPROACH SLAB

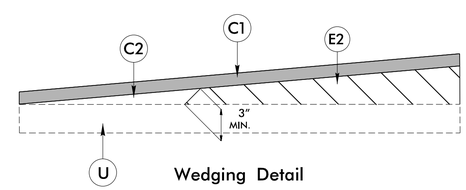

Wedging Detail

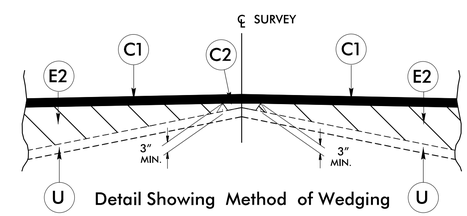

Detail Showing Method of Wedging

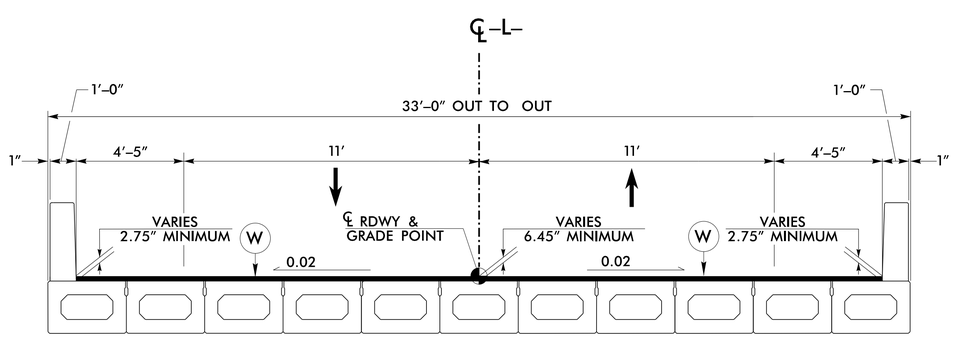

TYPICAL SECTION NO. 3

USE TYPICAL SECTION NO. 3

–L– STA. 12+62.81 (BEGIN BRIDGE) TO
–L– STA. 14+15.19 (END BRIDGE)

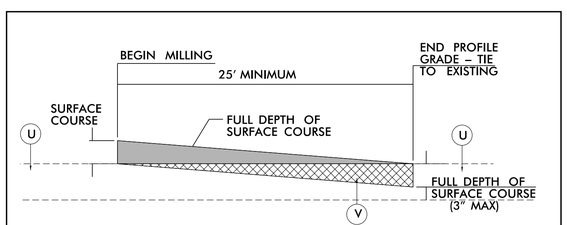

MILLING DETAIL

–L– STA. 10+50.00 TO 11+00.00
–L– STA. 16+25.00 TO 16+75.00

	PAVEMENT SCHEDULE
C1	PROP. APPROX. 3″ ASPHALT CONCRETE SURFACE COURSE, TYPE S9.5B, AT AN AVERAGE RATE OF 168 LBS. PER SQ. YD. IN EACH OF TWO LAYERS.
C2	PROP. VAR. DEPTH ASPHALT CONCRETE SURFACE COURSE, TYPE S9.5B AT AN AVERAGE RATE OF 112 LBS. PER SQ. YD. PER 1″ DEPTH. TO BE PLACED IN LAYERS NOT TO EXCEED 1½″ IN DEPTH.
E1	PROP. APPROX. 4″ ASPHALT CONCRETE BASE COURSE, TYPE B25.0B, AT AN AVERAGE RATE OF 456 LBS. PER SQ. YD.
E2	PROP. VAR. DEPTH ASPHALT CONCRETE BASE COURSE, TYPE B25.0B, AT AN AVERAGE RATE OF 114 LBS. PER SQ. YD. PER 1″ DEPTH. TO BE PLACED IN LAYERS NOT LESS THAN 3″ IN DEPTH OR GREATER THAN 5½″ IN DEPTH.
R1	SHOULDER BERM GUTTER (NCDOT STANDARD DRAWING NO. 846.01)
T	EARTH MATERIAL
U	EXISTING PAVEMENT
V	MILLING BITUMINOUS PAVEMENT. 1½″ DEPTH.
W	PROPOSED WEDGING (SEE APPROPRIATE DETAILS)

NOTE: PAVEMENT EDGE SLOPES ARE 1:1 UNLESS SHOWN OTHERWISE

SYTLINE: $$$$